Machine Angle Synchronization Without Additional Pulse Sensor

Supplement to TA-BL/P Description

These applications and parameters apply only for
Software Version BI60453

TAE Antriebstechnik GmbH • Am Kappengraben 20 • D-61273 Wehrheim
State 14.08.2003 V-1 EBI60453.PMD

Example 1: Master and slave drive brushless or servo system

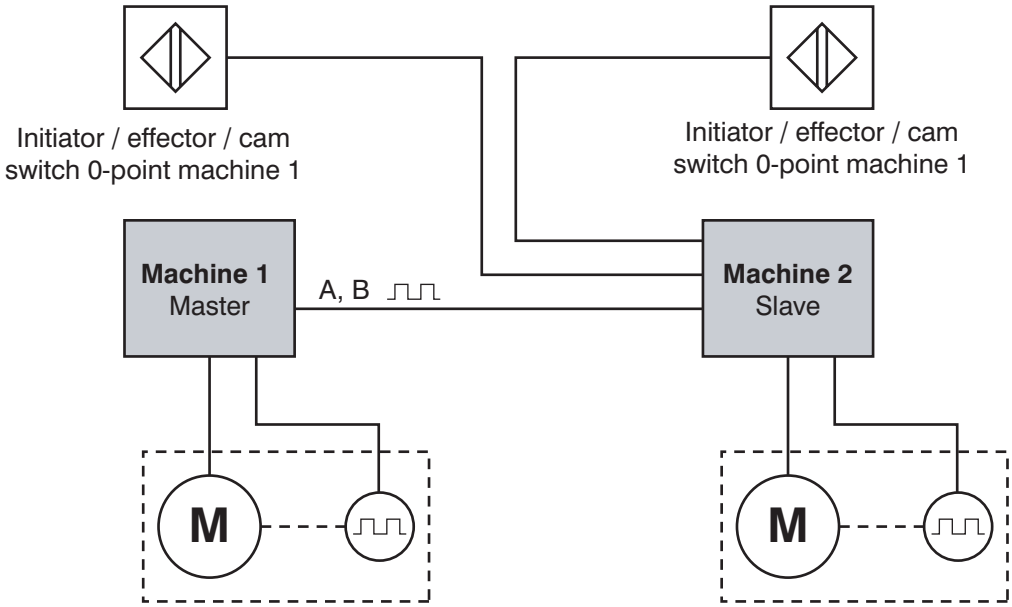

Example 2: Master drive no brushless or servo system

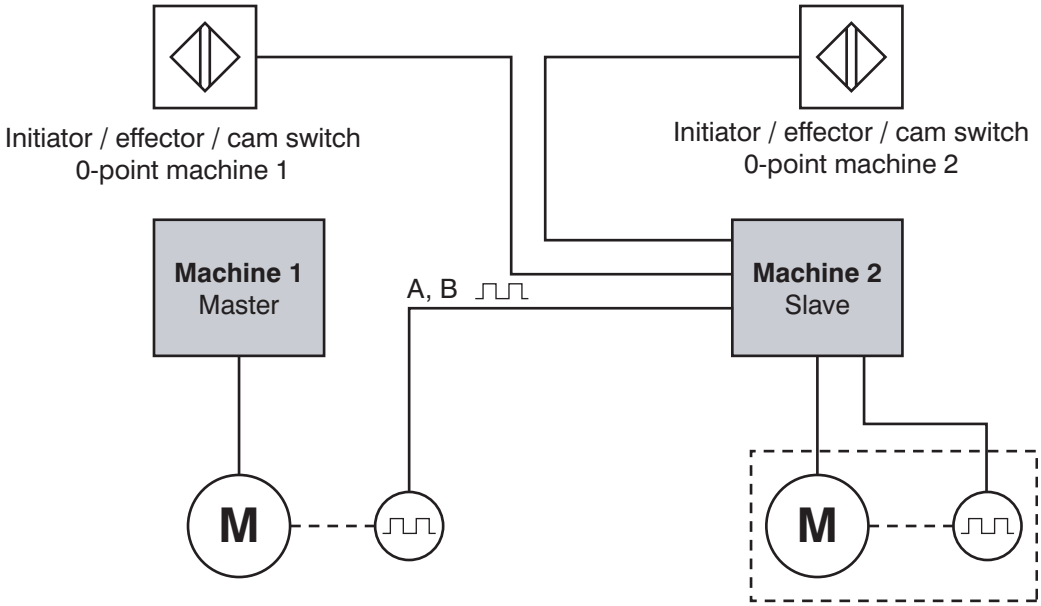

Initiators, effectors or cam switches

No additional pulse or absolute value sensor is required with this new synchronization system; a pulse sensor is attached to measure the master speed only when the master is not a brushless system (servo system).

In order to represent the following parameter designations in Driveadministrator, the Def file SWG01 must be loaded.

Note:
The following parameters have different functions than the TA-BL/P standard drives as of software version BL60453

Group/Parameter	Display	Parameter designation	Value range	Parameter setting	Units
2/15	INCR	Angle Shifting Limit (leading)	0...20000	9999	

Group/Parameter	Display	Parameter designation	Value range	Parameter setting	Units
2/16	DECR	Angle Shifting Limit (laging)	0...20000	9999	

The maximum angle shift is limited with parameters 2/15 and 2/16. No angle shift is permissible when the parameter setting is 0. The maximum angle shift of ± 20,000 corresponds to the example below.

Example:
Motor with 30 pulses/rotation sensor. Maximum angle shift limitation set to 9999. This setting results in an angle shift of 4.166 motor rotations. Gear ratio I = 11.7.

Calculation of angle shift at output shaft:

$$\frac{4{,}166}{11{,}7} \times 360 = \underline{\underline{128°}}$$

Note:
The pulse sensor is synchronized by the software, i.e. 9999 for a motor with 600 pulse/rotation sensor ≙ exactly the same as with 30 pulse/rotation sensor, an angle shift at output shaft of 128°.

Group/Parameter	Display	Parameter designation	Value range	Parameter setting	Units
2/29	DEC_C	Acceleration / Deceleration Time for Ratio Controller	0,1..599,9	55,0	s

The ramp times (for running up and running down) for the ratio regulator can be set for synchronization with these parameters. A small factor ensures rapid synchronization within one period after recognition of the zero pulse. At a larger setting, the synchronization procedure can take 2-3 cycles. If the number is set too small, vibration can occur. Stable regulation at an overall ratio of I = 10-30. Standard parameter setting is 55.0.

Group/Parameter	Display	Parameter designation	Value range	Parameter setting	Units
2/30	PHMAX	Start Measuring / Enable Cycle	0..65535	2	-

The start of synchronization for the slave drive is defined with this parameter.

Parameter setting 1: Synchronization accomplished after 2 zero points from master
Parameter setting 2: Synchronization accomplished after 3 zero points from master

Note:
At a small synchronization speed, it is possible to operate with motor speeds up to 500 rpm with parameter setting 1.

Group/Parameter	Display	Parameter designation	Value range	Parameter setting	Units
2/31	PLMAX	Maximal Ratio Factor	0..9999	500	-

The maximum ratio factor (stroke limitation hmax) for synchronization is set with this parameter (e.g. 500 corresponds to a value of 50 % of the ratio factor between parameters 4/12 and 4/13 (see also parameter 2/36)

Group/Parameter	Display	Parameter designation	Value range	Parameter setting	Units
2/34	MPOSP	Synchron Controller Output	1..6000	12	min^{-1}

With this parameter, the correction rate of the synchronous controller, which is added to the basic speed, is set immediately following synchronization (after the synchronization procedure).

Group/Parameter	Display	Parameter designation	Value range	Parameter setting	Units
2/35	WINPO	Position Window (Geberimpulse x4)	1...255	6	-

With this parameter, the positioning window (lag window) for takeover by the synchronous controller is determined. The number 6 means that with a 30 pulse motor, the synchronization controller is switched on at a deviation of 18° at the motor.

30 x 4 = 120 Pulses/rotation ≙ 360°
1 pulse ≙ 3°

Group/Parameter	Display	Parameter designation	Value range	Parameter setting	Units
2/36	KPP_P	Final adjustment for the Synchronisation	1...255	15	-

This parameter determines the final adjustment speed for synchronization according to the following equation:

$$h_{act} = \frac{e \times \text{Parameter } 4/12}{\text{Parameter } 2/36}$$

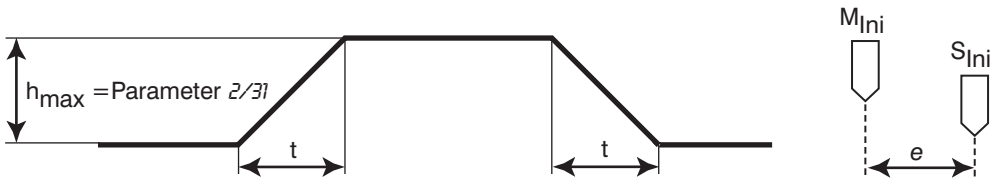

t= Parameter 2/29, the total time is based on the max. speed

whereby h_{act} is the current maximum value of the ratio controller and e the deviation between the master and slave initiator.

Note:
The synchronization operation is performed only at the beginning of each synchronization operation, e.g. after power failure or manual operation resynchronization is accomplished automatically following switch on.

Group/Parameter	Display	Parameter designation	Value range	Parameter setting	Units
2/37	ADJBC	Angle Shifting Time	0,1...100,0	0,4	s

With this parameter, the time for changing the angle shift can be defined by actuating leading and lagging. For example, the setting 0.4 s corresponds to an angle shift of 12° on the motor in 0.4 s.
Example 2 the setting 1 s ≙ 12°/1s.

Note:
If the time set is too short or too long (parameter 2/37), the signal "Position OK" (system angle synchronous) can be lost, therefore optimization of this parameter is of great importance.
After reaching the synchronous state, this status can be signaled with parameter 3/37 to 3/41 one of the selected terminals (t. 43 to 48) of the programmable outputs by entering the value 11.

Group/Parameter	Display	Parameter designation	Value range	Parameter setting	Units
3/16	SANG	Input Selection Initiator Slave	2 - 13	-	-

With parameters 3/16 and 3/17, the connection terminals for the initiators are defined (in each case enter terminal No.!)

Group/Parameter	Display	Parameter designation	Value range	Parameter setting	Units
3/17	SICW	Input Selection Initiator Master	2 - 13	-	-

Group/Parameter	Display	Parameter designation	Value range	Parameter setting	Units
3/18	SICCW	Input Selection Synchron Controller	0 - 13	1	-

If parameter 3/18 is activated, the synchronous controller is released with two initiators attached to the master and slave.

Group/Parameter	Display	Parameter designation	Value range	Parameter setting	Units
4/21	PULSE	Pulses to end position	1 - 64000	1	-

With this parameter, the possible shift of the electromechanical clutch is compensated. The value represents the absent interval between the master and slave initiators.
If the current actual position has reached this value, this status "Reference position is reached" is signaled to the selected terminals for digital outputs 3/37 to 3/41 by entering the value 12. This allows the clutch on the press to be switched on, for example.

Note:
If parameter (4/21) is equal to or less than 1, the momentary actual position is not compared with the parameter. In this case, the signal "Reference position reached" is set statically and has no significant function.

To ensure proper functions, the following parameters must be set appropriately.

Group/Parameter	Display	Parameter designation	Parameter setting
2/15	INCR	Angle Shifting Limit (leading)	0 - 20000
2/16	DECR	Angle Shifting Limit (laging)	0 - 20000
3/13	SSLAV	Input Selection Slave	1
3/15	SSYNC	Input Selection Synchron, Angle or Speed	0
4/12	TRAN1	Transmission Factor n x Value	not above 1000
4/13	TRAN2	Transmission Factor n / Value	not above 1000
4/14	LIMIT	Limiter (No Accumulation while IL)	1
4/17	PPR_M	Pulses per Revolution of Master x4	as directed below

Pulse determination guide value:
Operate master motor at 50 % of rated machine speed, for example. Read off display in slave parameter 0/08 and set desired final speed of slave motor to 50 % with aid of parameter 4/11.

4/18	KPSLV	Amp. of Sync. Velocity Regulator	1%
4/20	SMOD	Select Slave Mode	1